LaserPecker

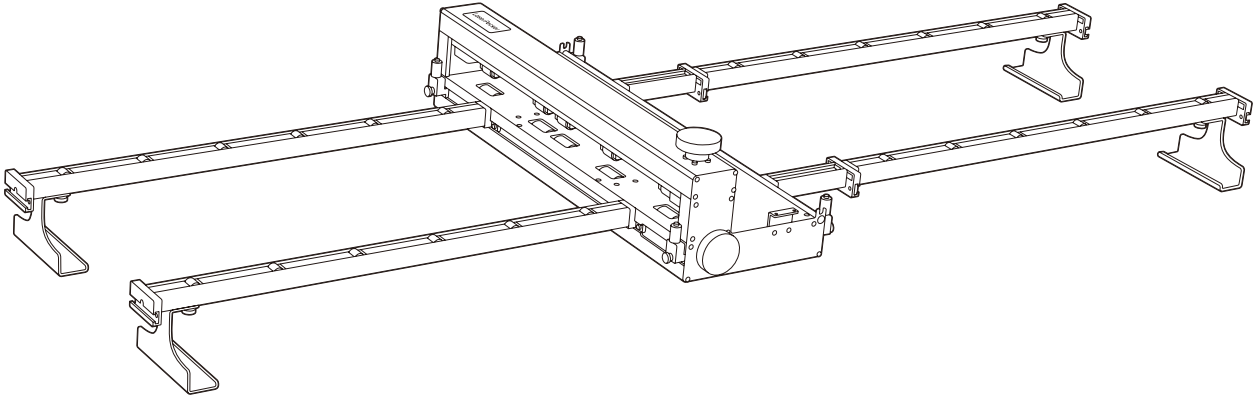

CONVEYOR FEEDER BASE KIT

v1.0

使用说明书 | User Manual | 取扱説明書 | 사용 설명서 | 使用說明書

LaserPecker

中文简体 ---------- 01

English ---------- 22

日本語 ---------- 43

한국어 ---------- 64

中文繁體 ---------- 85

Contents

Safety Information ---- 22

Product Overview ---- 23

Getting Help ---- 23

Package List ---- 24

Product Structure ---- 25

Quick Assembly ---- 26

Using the Product ---- 34

Care and Maintenance ---- 40

Accessory Usage ---- 41

Statements ---- 42

Safety Information

Read Before Use

The Conveyor Feeder must be used together with the LaserPecker LX2 and Riser Base. Before installation or operation, make sure all components are properly installed, the equipment is placed on a stable surface, and the feeding path is clear.

For safe operation, observe the following precautions:

- Disconnect the power before installation.
  Before installing, removing, or connecting the Conveyor Feeder, turn off and unplug the LX2 to prevent damage to the connectors, motor, or control board.
- Check the equipment before use.
  Make sure the main unit, Riser Base, Conveyor Feeder, Extension Rods, Extension Rod Bases, Connecting Rods, and Connection Cable are free from looseness, deformation, damage, or abnormal wear.
- Keep the feeding path clear.
  Keep cables, exhaust hoses, and other objects on the work surface organized to prevent materials from being obstructed, scratched, or jammed during feeding.
- Never leave the machine unattended during operation.
  Long materials may shift, lift, jam, or pose a fire risk during feeding. Do not operate the equipment unattended.
- Clean debris and residue regularly.
  Wood chips, paper scraps, dust, adhesive residue, and other debris may be ignited by the laser. Keep the inside of the main unit, Conveyor Feeder, and guide rail areas clean.
- Do not process hazardous materials.
  Do not process PVC, vinyl, chlorine- or fluorine-containing materials, unknown plastics, flammable or explosive materials, or materials that may release toxic, harmful, or corrosive gases.
- Do not process materials of unknown composition.
  Confirm the material type before processing. If you are unsure, do not process the material. It is recommended to perform a small test on a scrap piece first.
- Stop immediately in case of an abnormality.
  If you notice an open flame, unusual smoke, a pungent odor, material misalignment or jamming, abnormal noises, or suspected laser leakage, stop the machine immediately. If necessary, press the Emergency Stop button and disconnect the power.

Safety Information

- Keep away from moving and laser areas.
  Do not place your hands, hair, clothing, tools, or other objects inside the Conveyor Feeder, guide rails, pinch rollers, or laser working area while the equipment is operating.
- Do not bypass safety features.
  Do not remove, block, bypass, or modify the LX2's door detection, Emergency Stop, protective covers, or other safety features.
  Opening the top cover or front door during operation will pause processing.
- Observe the operating environment.
  Use the equipment in an ambient temperature of 0 °C–35 °C and store it at 0 °C–45 °C. Do not operate the equipment at temperatures below 0 °C.
- Support long materials properly.
  When processing long sheets, make sure both ends of the material are securely supported to prevent sagging, slipping, or lifting, which may cause the equipment to move.

Product Overview

The Conveyor Feeder is a large-format processing accessory designed for use with the LaserPecker LX2 and Riser Base. Once installed, the Laser Module moves along the X-axis, while the Conveyor Feeder moves the material along the Y-axis. It helps feed long strips, sheets, and flexible materials in a specified direction during processing, enabling large-format engraving or cutting beyond the LX2's single-pass working area.

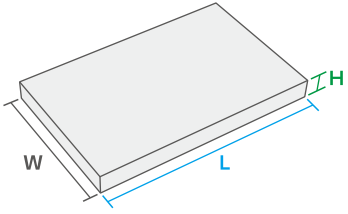

For longer materials, additional Extension Rods can be purchased separately to extend the processing length.

0 mm<L≤1200 mm
0 mm<H≤15 mm
0 mm<W≤480 mm

Getting Help

Technical Support

If you encounter any issues, please do not hesitate to reach out to our customer support team at support@laserpecker.com
YouTube: @LaserPecker
Facebook Group: LaserPecker LX2 Official Group

Video Tutorials

Scan the QR code below for the Conveyor Feeder installation tutorial.

Package List

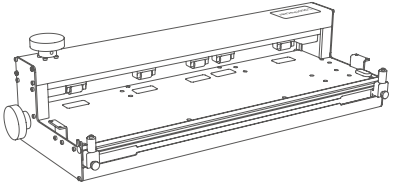

Conveyor Feeder × 1

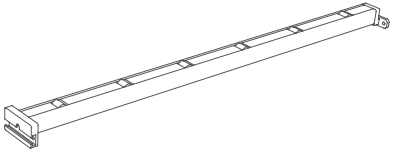

Extension Rod × 4

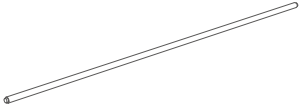

Material Press Rod × 1

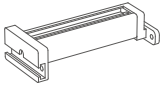

Connecting Rod × 2

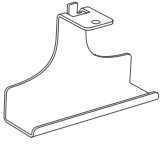

Extension Rod Base × 4

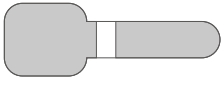

Hook-and-Loop Strap × 2



H2.5 Hex Key × 1

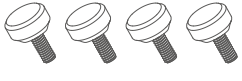

M6*6 Thumb Screw × 4



M4*6 Thumb Screw × 12



M3*6 Hex Socket Screw × 4

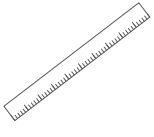

Ruler × 1



User Manual × 1

Product Structure

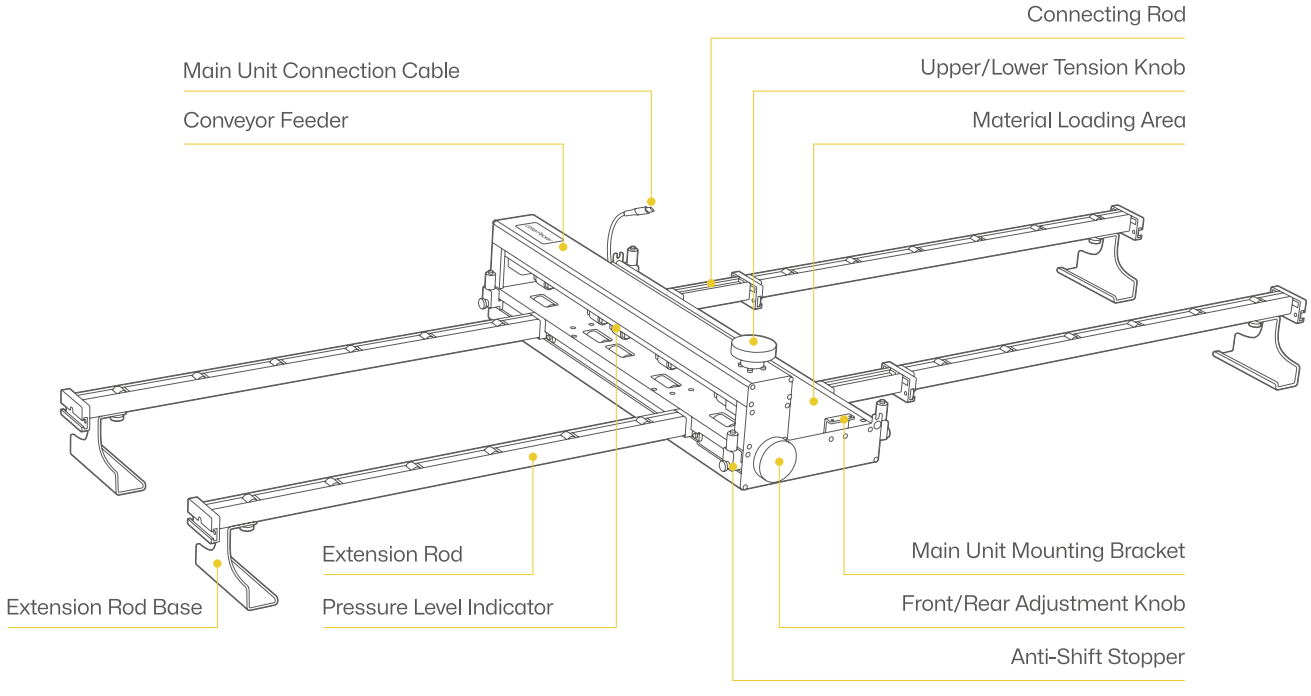

Quick Assembly

1. Open the front and rear doors of the Riser Base.

Before installing the Conveyor Feeder, install the Riser Base first. (The Riser Base is sold separately.)

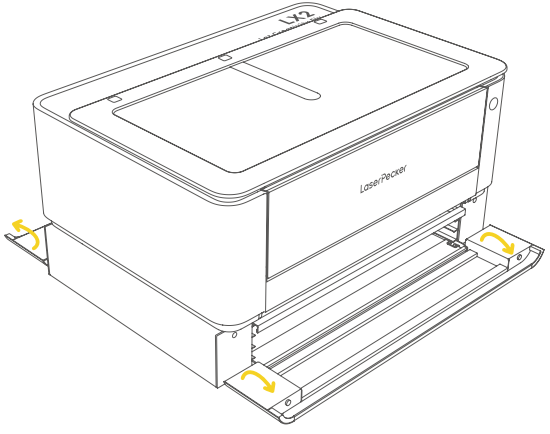

2. Move the base plate to the lowest level of the Riser Base.

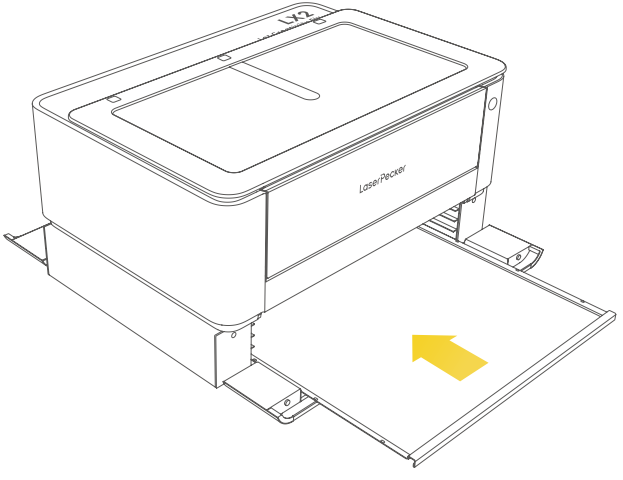

Quick Assembly

3. Insert the Conveyor Feeder through the front door of the Riser Base.

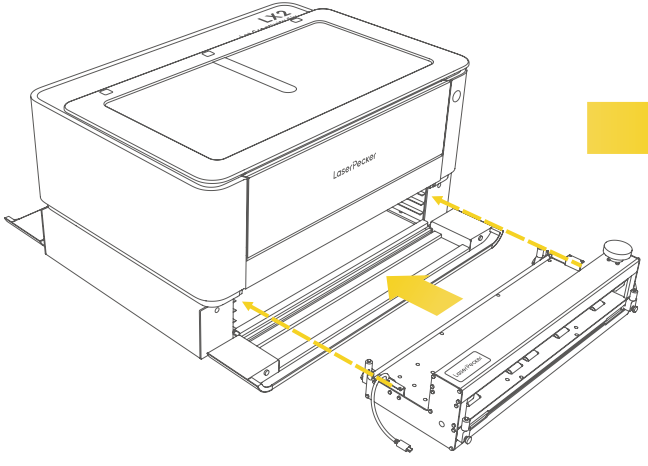

4. Align the Main Unit Mounting Brackets on both sides of the Conveyor Feeder with the indicated level of the Riser Base and place them in position.

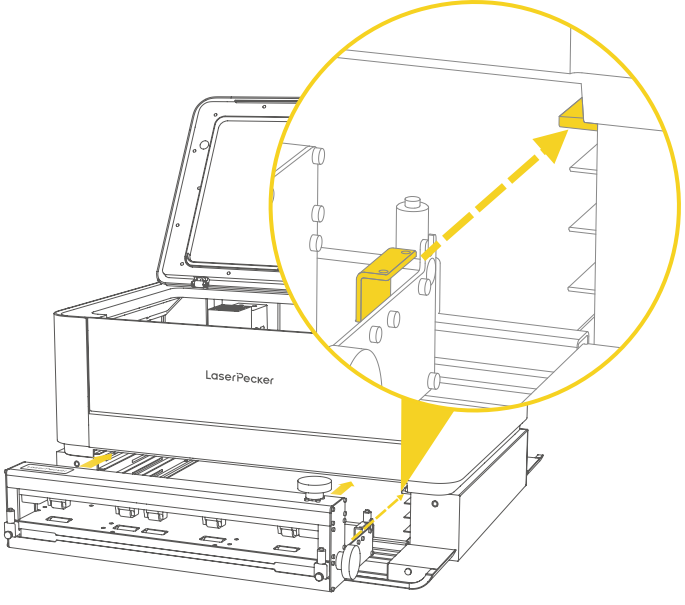

Quick Assembly

5. Align the Main Unit Mounting Brackets with the mounting holes on the Riser Base. Insert two M3*6 Hex Socket Screws on each side and tighten them with the H2.5 Hex Key.

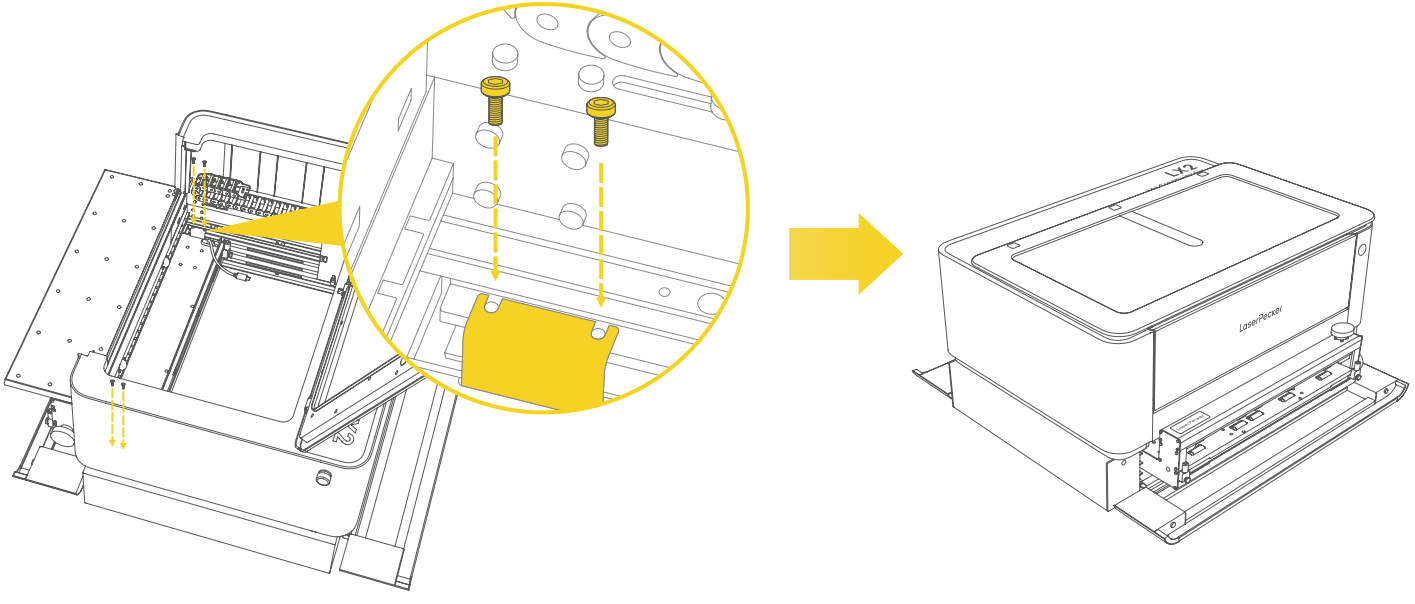

Quick Assembly

6. Slide the T-nut in the inner slot to the A end of the Extension Rod.

Connector A End

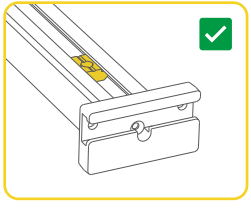

Connector B End

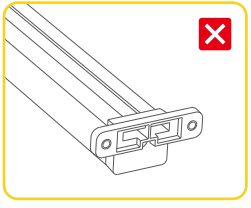

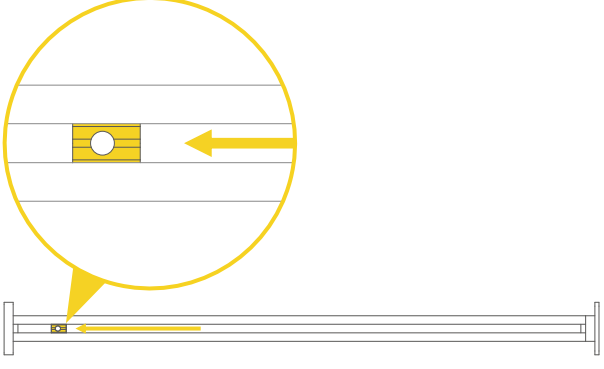

7. Align the holes on the Extension Rod Base with the T-nut on the Extension Rod and tighten with an M6*6 Thumb Screw. (Repeat the same procedure for all four Extension Rods.)

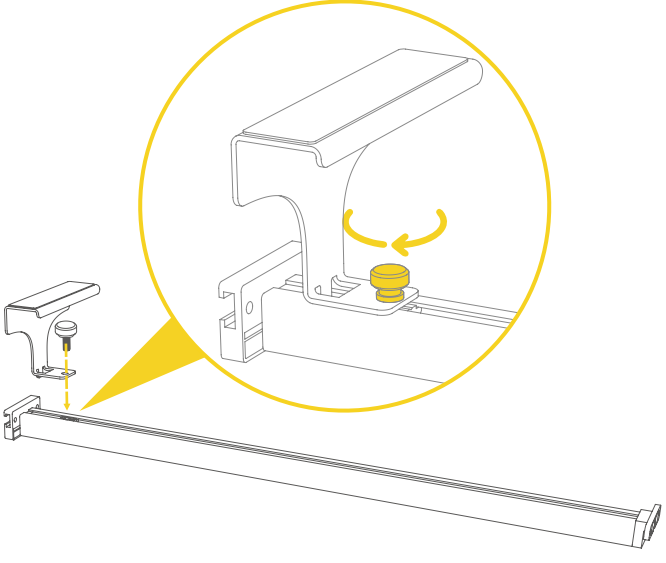

Quick Assembly

8. Align the Extension Rod with the slots on both sides of the main unit and insert it.

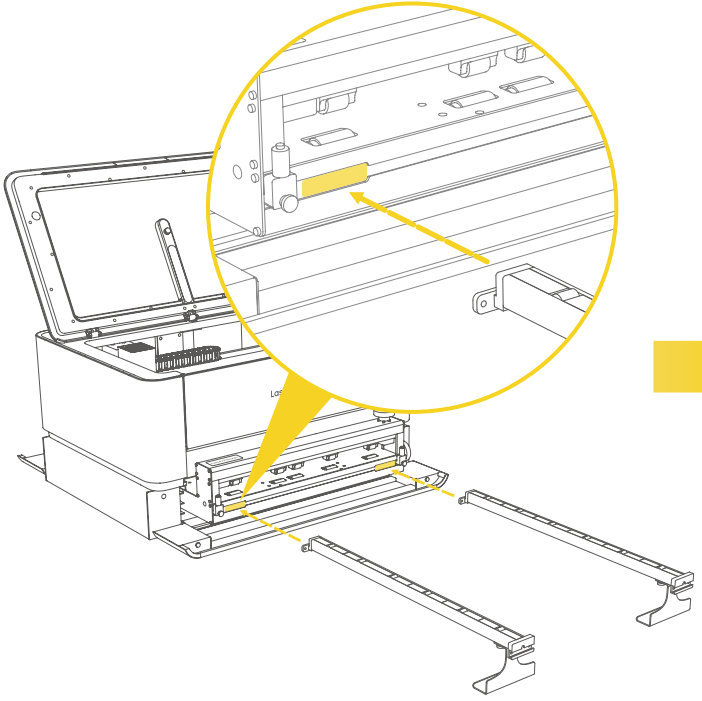

9. Slide it inward along the slots to the appropriate position.

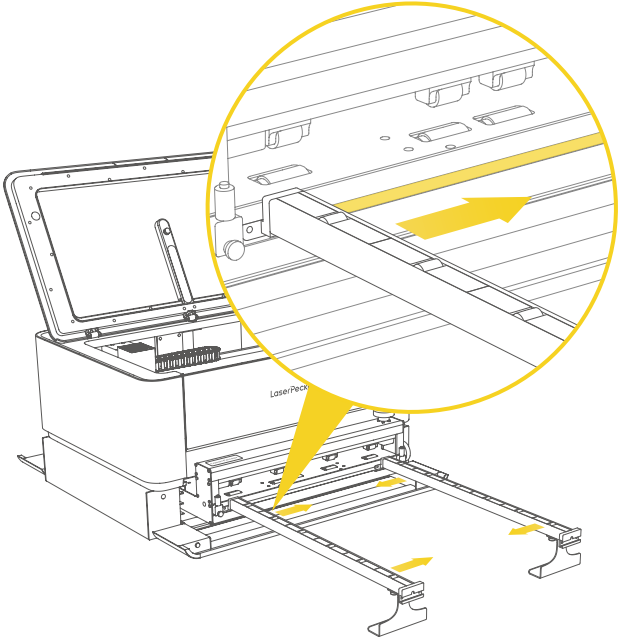

Quick Assembly

10. Tighten with an M4*6 Thumb Screw.

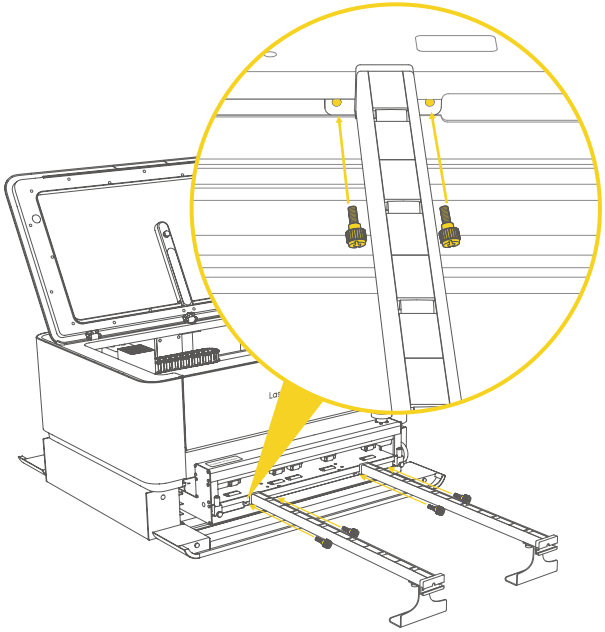

11. As shown in the illustration, connect the B End of the Extension Rod to the A End of the Connecting Rod.

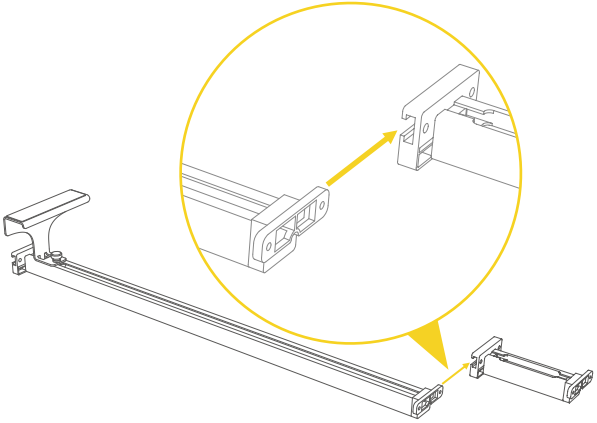

Pay attention to the orientation of the Connecting Rod.

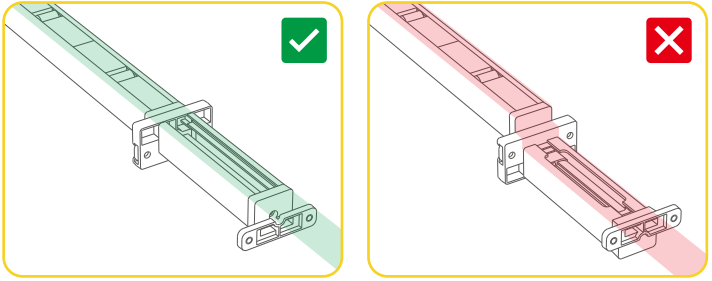

12. Tighten with an M4*6 Thumb Screw.

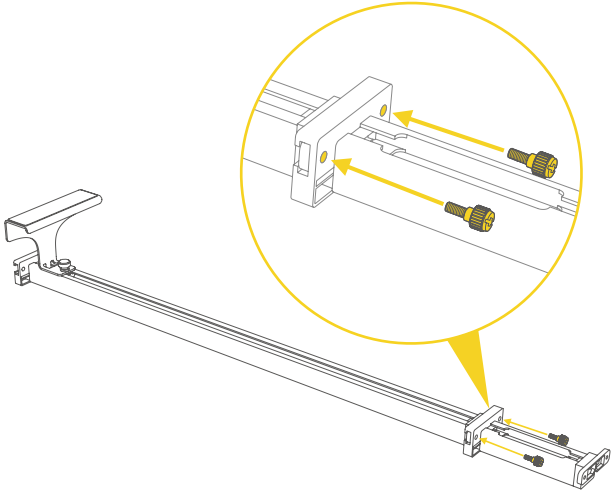

13. Repeat Steps 8–10 to install the Extension Rod on the other side of the Conveyor Feeder.

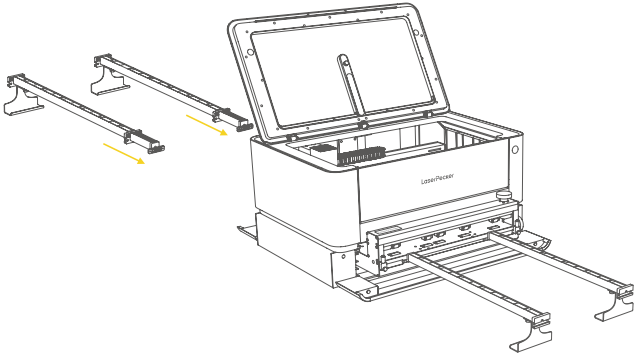

Make sure the distance between the Extension Rods on both sides is consistent and that they remain parallel to the edges of the machine.

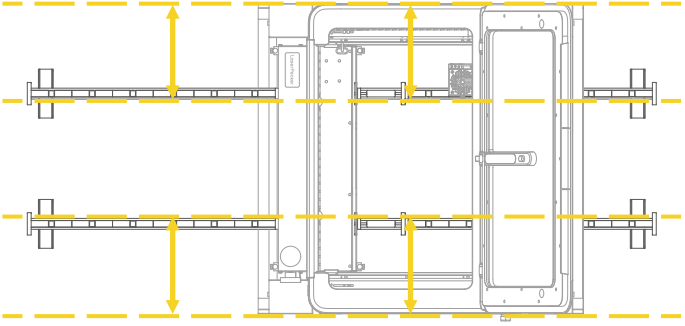

14. Connect the power cable. (Turn off the LX2 before connecting the Conveyor Feeder to avoid damaging the machine.)

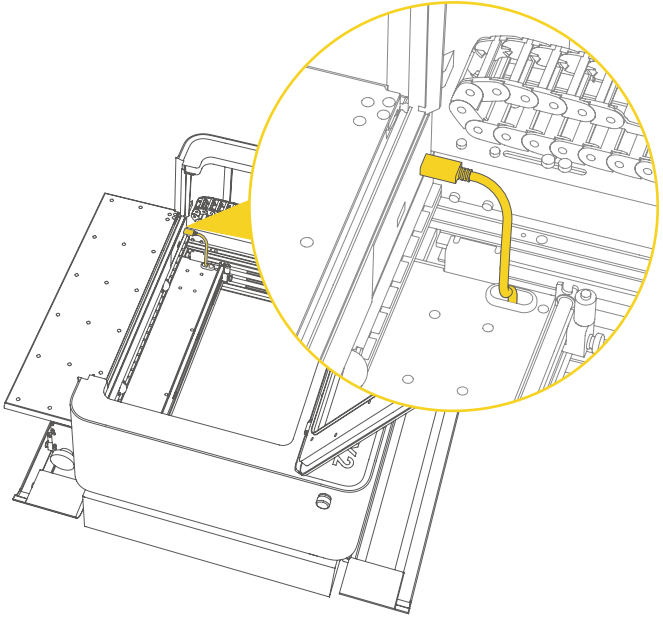

15. To prevent the cables from interfering with the back-and-forth movement of the workpiece during engraving, attach the Hook-and-Loop Strap to a suitable position on the back of the machine and organize the cables neatly.

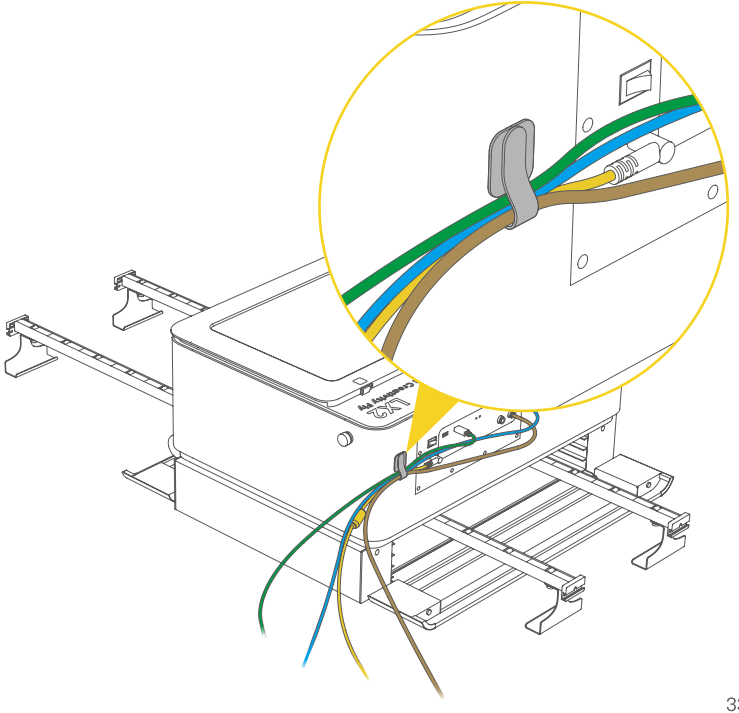

Rigid Materials

1. Load the material.

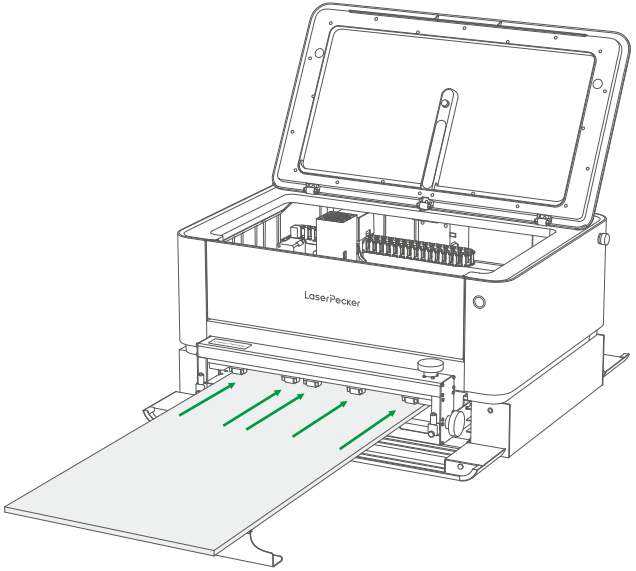

Precautions

(1) Use flat materials without curled or raised edges.
(2) Adjust the spacing between the conveyor rails according to the width of the material to ensure that the material is conveyed smoothly without causing distortion of the engraved pattern.
(3) Make sure the edge of the material is parallel to the vertical grid lines to prevent the engraved pattern from being misaligned.

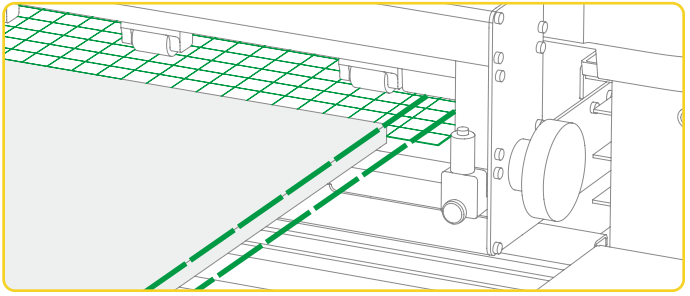

(4) Make sure the material fully covers the lower pressure rollers to prevent it from shifting during feeding.

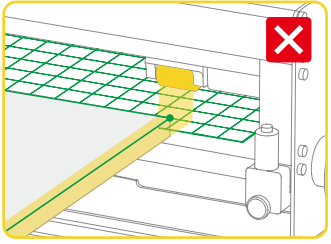

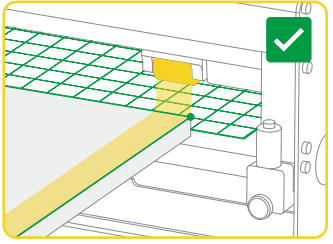

Using the Product

(5) The unsupported length of the material should not exceed 400 mm.

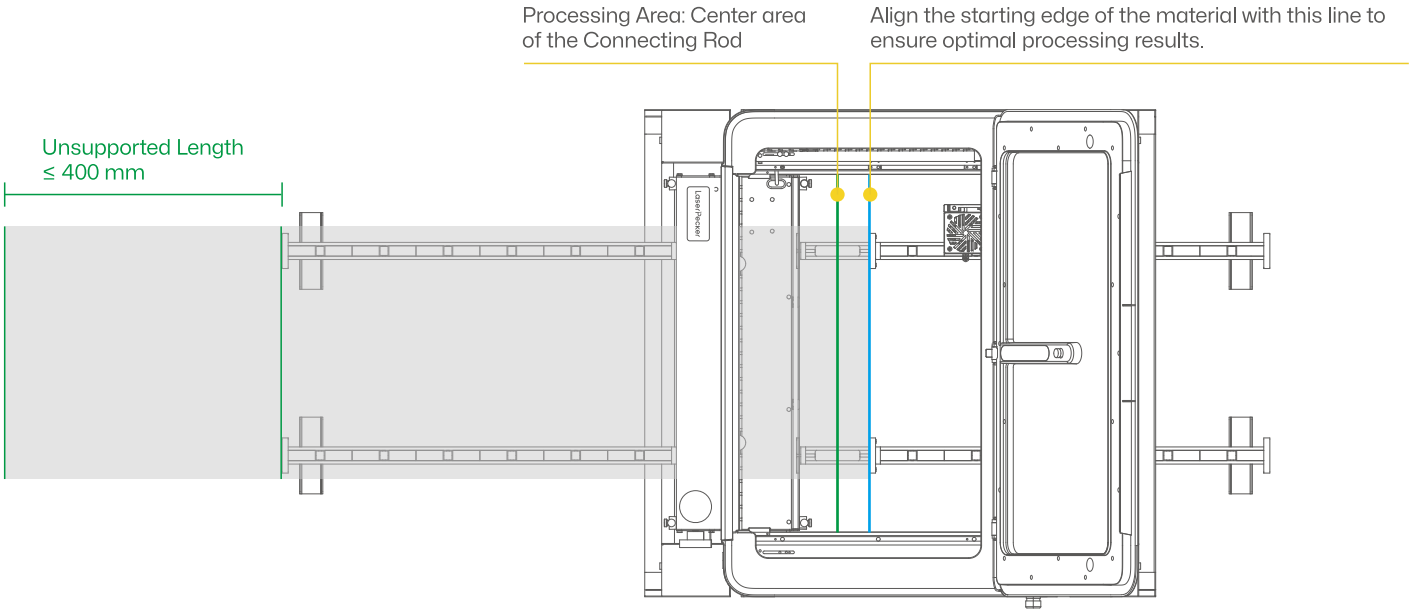

2. Adjust the positions of the four Anti-Shift Stoppers according to the material width. Make sure the stoppers are firmly against the edges of the material, then tighten the screws clockwise one by one to prevent the workpiece from moving sideways during engraving.

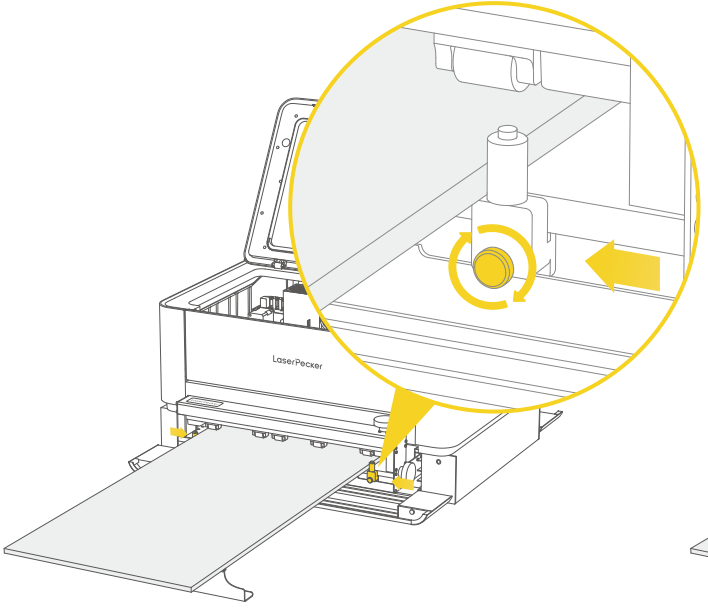

Precautions

The front and rear Anti-Shift Stoppers should be evenly spaced and parallel to the vertical grid lines to prevent pattern misalignment.

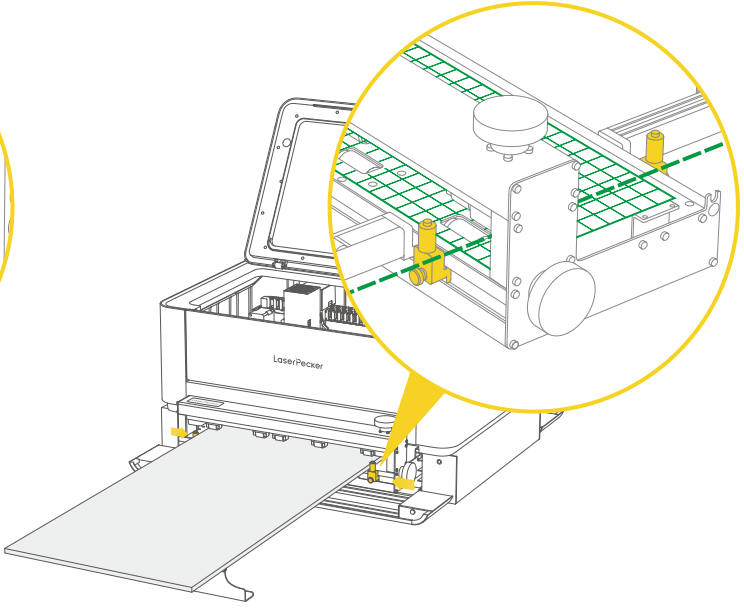

3. Rotate the knob to adjust the pressure rollers. Set the pressure according to the material type using the Common Material Pressure Settings.

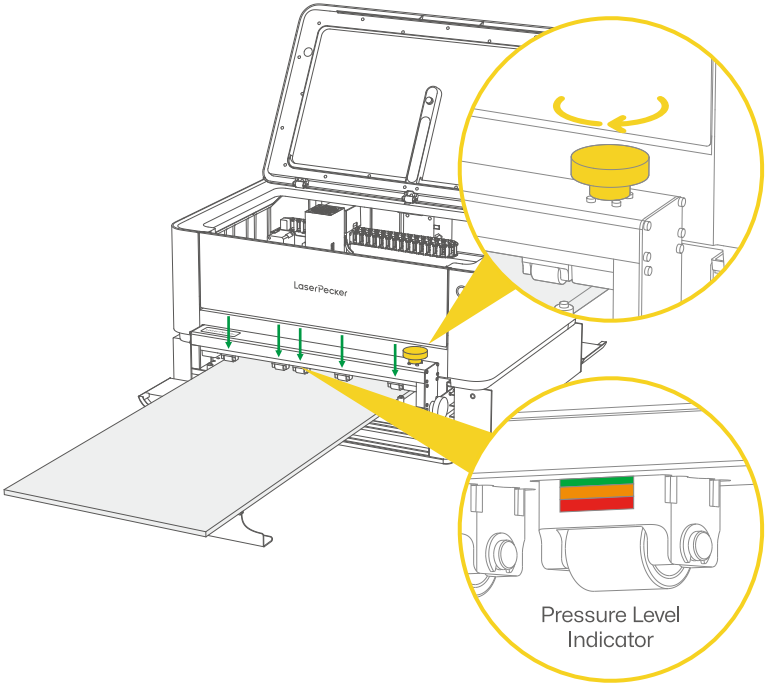

Common Material Pressure Settings

Refer to the table below and adjust the pressure according to your actual needs.

Material	Thickness	Pressure Level
Basswood Plywood Sheet	3 mm	
Basswood Plywood Sheet	6 mm	
Basswood Plywood Sheet	15 mm	
Acrylic	3 mm	
Acrylic	6 mm	
Acrylic	15 mm	
Fiberboard	3 mm	
Fiberboard	6 mm	
Fiberboard	15 mm	

4. Rotate the Front/Rear Adjustment Knob to push the material in or out for fine positioning. Check that the material is clamped firmly to prevent slipping.

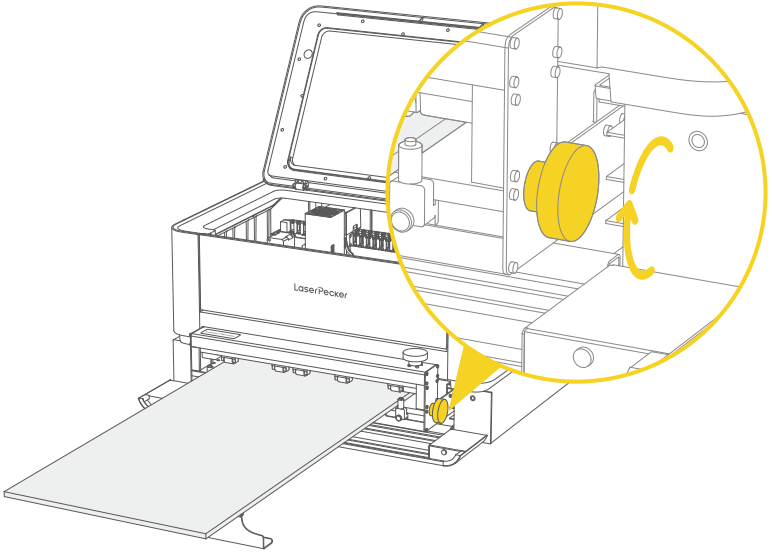

Precautions

To ensure smooth material return, keep the processing area at least 250 mm from the rear edge.

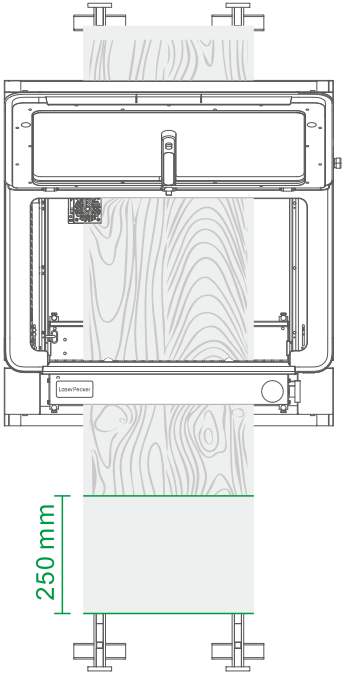

Flexible Materials

1. When processing flexible materials (such as paper or softwood), attach the material to a rigid material before processing.

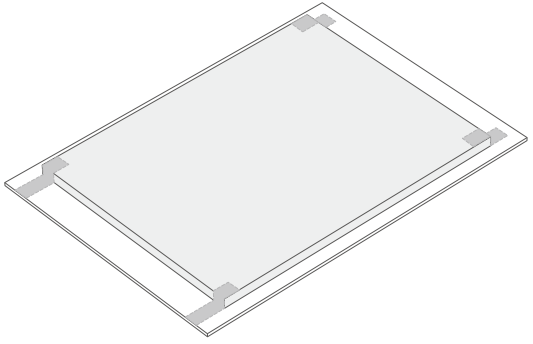

2. When processing thin flexible materials, use the Material Press Rod to flatten the material.

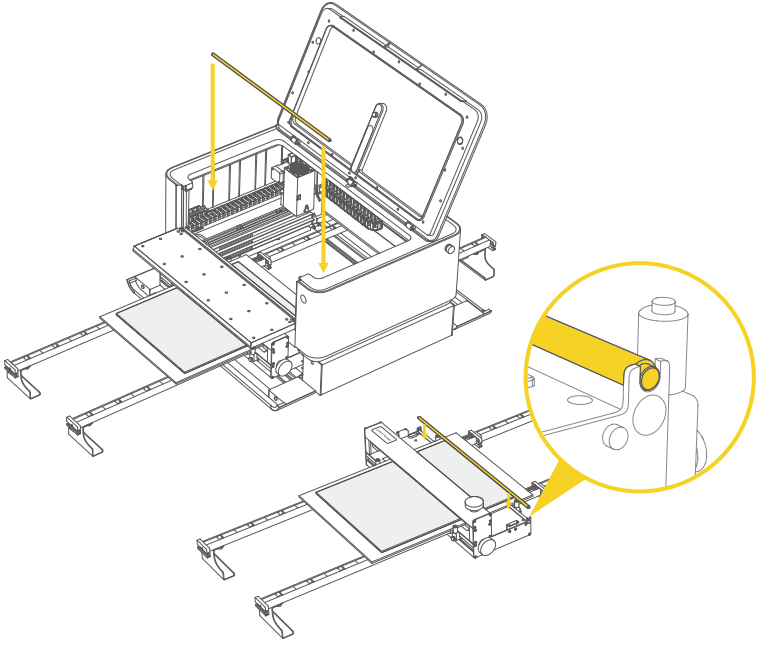

Care and Maintenance

After extended use, if debris builds up on the lower pressure rollers, flip the Conveyor Feeder over, turn the adjustment knob, and clean the rollers with a brush.

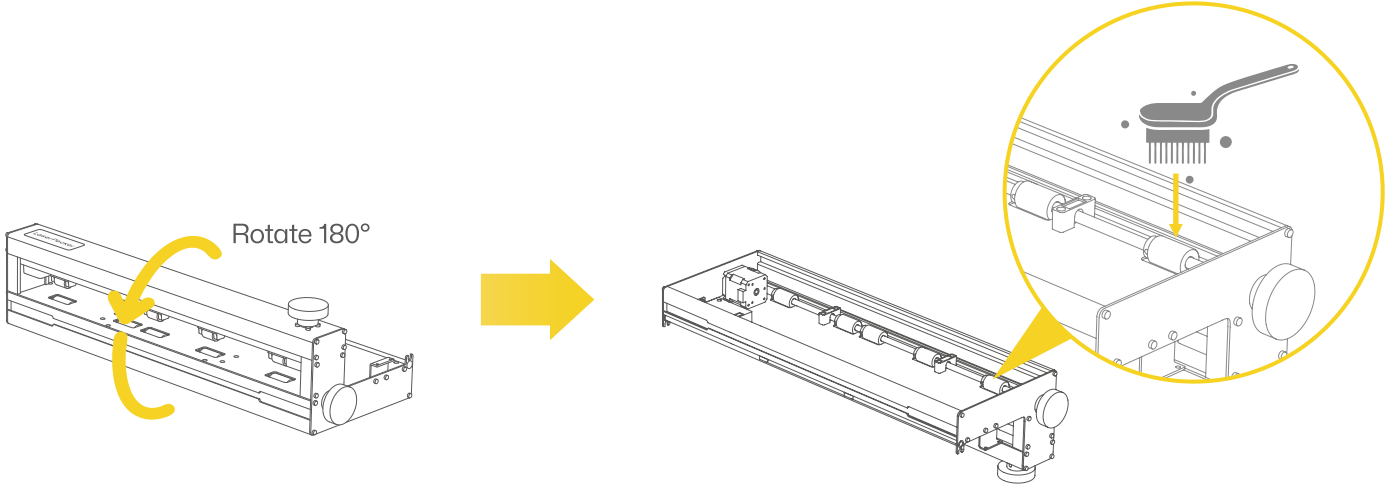

Accessory Usage (Optional)

For longer materials, purchase additional Extension Rods to process materials up to 3 m long.
Connect the Extension Rods and tighten them with M4*6 Thumb Screws.

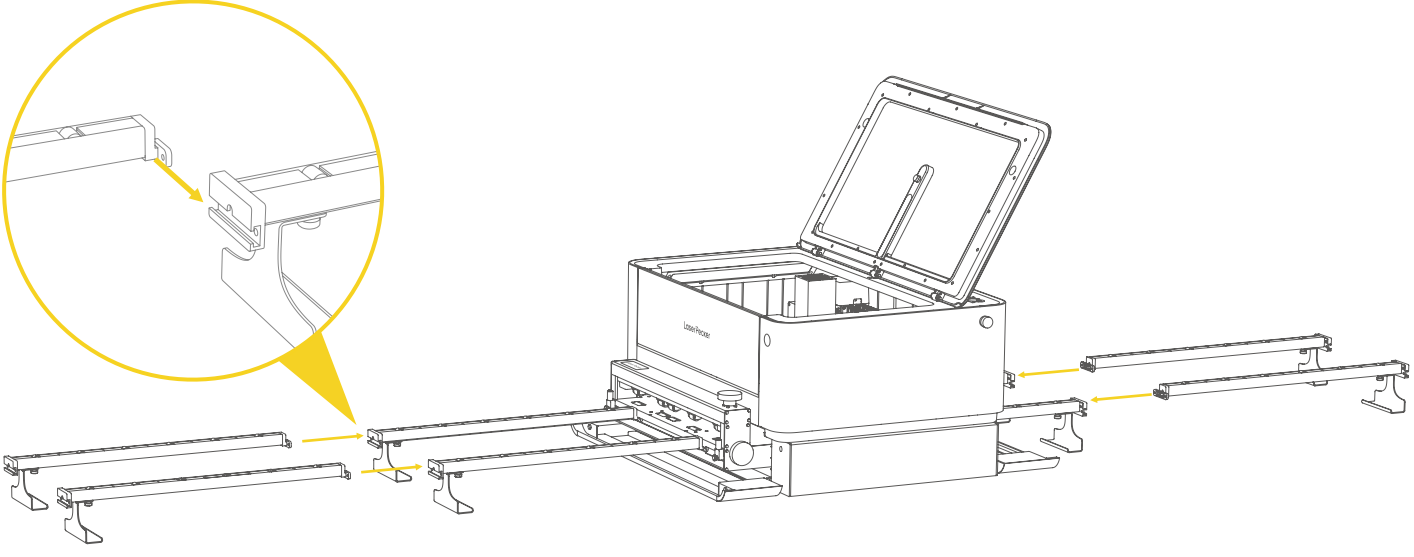

Statements

Disclaimer

Thank you for choosing LaserPecker! This manual relates to your safety, legal responsibilities and rights. Please read and get familiar with all safety precautions and procedures before using the product. If you do not use the product according to the instructions and requirements of the manual, or mis-operate the product due to misunderstanding, etc., LaserPecker (Hingin Technology Co., Ltd.) shall bear no responsibility for any loss resulting therefrom.

Given the conditions and methods of use of this product are beyond the control of LaserPecker, LaserPecker shall not be liable for any of the following consequences, which shall be borne by the user:

- Personal injury, property loss, and product damage caused by improper operation, failure to follow the manual or other uncertainties.
- The work that user created using the LaserPecker product infringes intellectual property rights of the third party or violates relevant laws and regulations.
- Personal injury, property loss, and product damage that may arise during the installation, transportation, storage, use, maintenance, and disposal of this product.
- All official LaserPecker materials have undergone safety testing and are compatible with this product. LaserPecker shall not be liable for material safety or engraving quality if the user uses non-LaserPecker official materials.

Copyright

- Copyright of this manual, as well as the rights to the software and hardware related to this product, are owned by Shenzhen Hingin Technology Co., Ltd. (hereinafter referred to as "Hingin Technology"). LaserPecker is a registered trademark of Hingin Technology.
- The information in this manual may be changed without notice; The information in this manual does not constitute a commitment of the Company. Please learn about the latest update from (https://www.laserpecker.net). The contents of this manual shall not be rewritten or forwarded in any form or for any purpose without the written permission of the Company.

LaserPecker